# JUNCTION BOXES

# AND CABLE BOXES

Woertz AG
Hofackerstrasse 47, P.O. Box 948, CH-4132 Muttenz 1, Switzerland
Phone ++41 (0)61 466 33 33, Fax ++41 (0)61 461 96 06
www.woertz.ch

Woertz USA
151 Discovery Drive, Unit 111
Colmar, PA 18915
Phone (215) 997 8855, Fax (800) 522-3868
www.woertz-usa.com, e-mail: woertz1@erols.com

# Structure of the catalog

article description

general information

dimension illustration

article number

technical data

suitable accessories

## Junction boxes w. base-plate of sheet steel and cover of thermosetting mat., white

**2.5+6 mm²**

- Corrosion-proof base-plate of sheet steel with riveted Woertz rail No. 4050A (see brochure "Screw terminals", page 1.1.134)
- Pre-scored inlets
- Sealable cover nuts
- With two-screw steatite terminals, of the range 4020... with removable sliding cover for through conductors. Metal parts of nickel-plated brass.
- Halogen-free cover

2185C

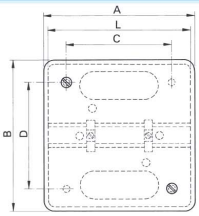


### Article numbers

| Cross-section | | 5 x 2.5 mm² | | 5 x 6 mm² | | 5 x 6 mm² | |
|---|---|---|---|---|---|---|---|
| Ratings | | 500V/16A | | 500V/41A | | 500V/41A | |
| with terminals 3P + N + PE | | **2095C** | | **2185C/95** | | **2185C** | |
| with rail, without terminals | | **2078C** | | **2078C** | | **2080C** | |

### Technical data

| | | | | |
|---|---|---|---|---|
| A | mm | 95 | 95 | 115 |
| B | mm | 95 | 95 | 115 |
| Height | mm | 46 | 46 | 59 |
| Distance between holes C | mm | 77 | 77 | 78 |
| Distance between holes D | mm | 77 | 77 | 78 |
| Length of rail L | mm | 87 | 87 | 106 |
| Fastening hole ∅ | mm | 5 | 5 | 5 |
| Packing unit | pcs | 10 | 10 | 5 |

### Accessories

| | | | | |
|---|---|---|---|---|
| **Replacement cover** | | **31061** | **31061** | **31062** |
| Packing unit | pcs | 10 | 10 | 5 |

woertz

4.1.1

catalog register 4

section 1

page number

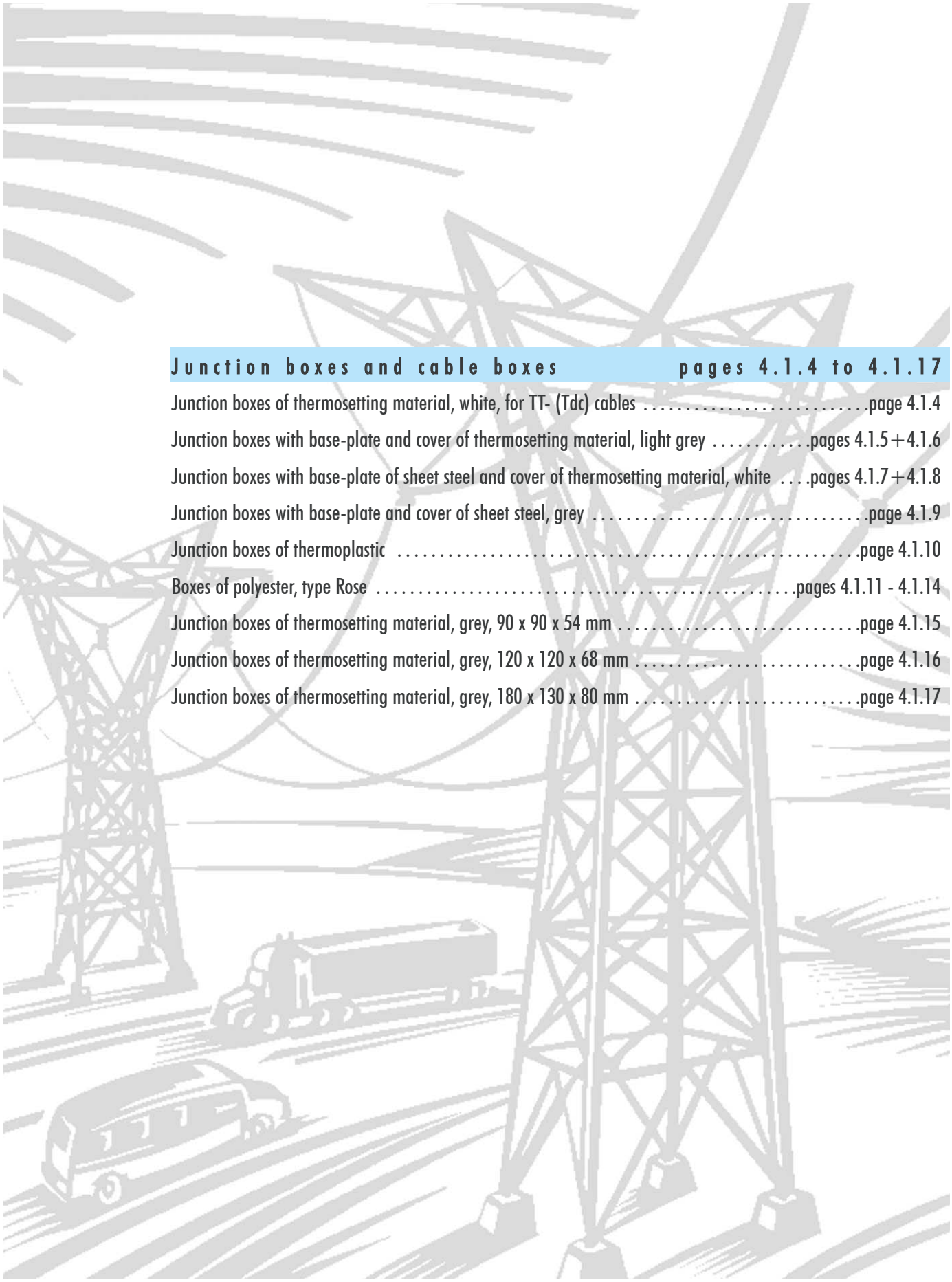

## Junction boxes and cable boxes pages 4.1.4 to 4.1.17


Junction boxes of thermosetting material, white, for TT- (Tdc) cables ..... page 4.1.4

Junction boxes with base-plate and cover of thermosetting material, light grey ..... pages 4.1.5+4.1.6

Junction boxes with base-plate of sheet steel and cover of thermosetting material, white .... pages 4.1.7+4.1.8

Junction boxes with base-plate and cover of sheet steel, grey ..... page 4.1.9

Junction boxes of thermoplastic ..... page 4.1.10

Boxes of polyester, type Rose ..... pages 4.1.11 - 4.1.14

Junction boxes of thermosetting material, grey, 90 x 90 x 54 mm ..... page 4.1.15

Junction boxes of thermosetting material, grey, 120 x 120 x 68 mm ..... page 4.1.16

Junction boxes of thermosetting material, grey, 180 x 130 x 80 mm ..... page 4.1.17

# Junction boxes of thermosetting material, white, for TT- (Tdc) cables

## up to 4 x 1.5 mm²

- Only for use in dry media
- Two-part casing with pre-scored inlets
- Terminal with one headless screw, with clamping ring, for through conductors, of nickel-plated brass, steatite base.
- Protected by spring against working loose
- Halogen-free

### Article numbers

| | | |
|---|---|---|
| Cross-section | 3 x 1.5 mm² | 4 x 1.5 mm² |
| Ratings | 500V/10A | 500V/10A |
| with terminals 2P + PE | **2977C** | |
| with terminals 3P + PE | | **2974C** |

### Technical data

| | | | |
|---|---|---|---|
| A | mm | 64 | 50 |
| B | mm | 30 | 50 |
| Height | mm | 22 | 23 |
| Distance between holes C | mm | 15 | |
| Fastening holes ∅ | mm | 4.5 | 4.5 (in the middle) |
| Packing unit | pcs | 10 | 10 |

### Accessories

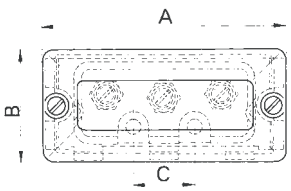


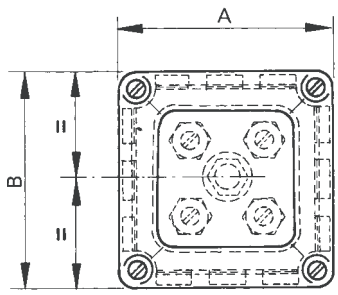

# Junction boxes with base-plate and cover of thermoplastic, light grey

## 2.5-10 mm²

- Base-plate with mounting rail according to EN 60715 TH 35
- Unbreakable, self-extinguishing
- Inlets to be cut out
- Sliding label L-K-W-S
- Sealable cover nuts
- With two-screw terminals of polyamide of the range 30840... with removable sliding cover for through conductors.
  Metal parts of nickel-plated brass.

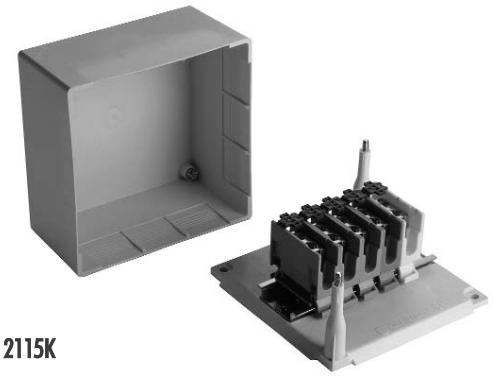

2115K

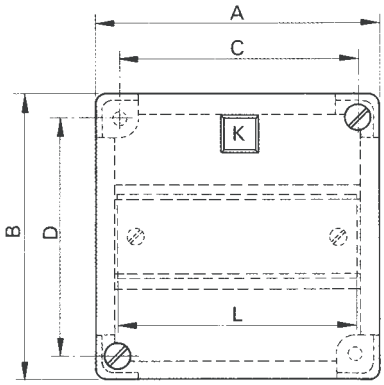


## Article numbers

| Cross-section | 5 x 2.5 mm² | 5 x 6 mm² | 5 x 10 mm² |
|---|---|---|---|
| Ratings | 500V/16A | 500V/41A | 500V/57A |
| with terminals 3P + N + PE | **2094/5K*** | **2185K** | **2115K** |
| with rail, without terminals | **2079K** | **2078K** | **2080K** |
| without rail | **2069K** | **2068K** | **2070K** |

## Technical data

| | | | | |
|---|---|---|---|---|
| A | mm | 78 | 95 | 115 |
| B | mm | 78 | 95 | 115 |
| Height | mm | 44 | 51 | 60 |
| Distance between holes C | mm | 60 | 77 | 97 |
| Distance between holes D | mm | 60 | 77 | 97 |
| Length of rail L | mm | 62 | 79 | 99 |
| Fastening holes ∅ | mm | 5.3 | 5.3 | 5.3 |
| Packing unit | pcs | 10<br>*2094/5K: PU=20 pcs | 10 | 5 |

## Accessories

| | | | | |
|---|---|---|---|---|
| **Replacement cover** | | **31069** | **31064** | **31063** |
| Packing unit | pcs | 10 | 10 | 5 |

# Junction boxes with base-plate and cover of thermoplastic, light grey

## 16+35 mm²

- Base-plate with mounting rail according to EN 60715 TH 35
- Unbreakable, self-extinguishing
- Inlets to be cut out
- Sliding labels L-K-W-S
- Sealable cover nuts
- With two-screw terminals of polyamide, of the range 30840... with removable sliding cover for through conductors.
  Metal parts of nickel-plated brass.

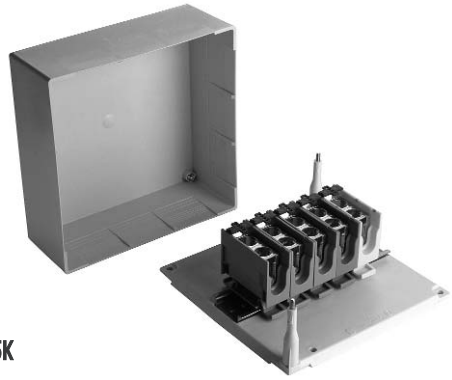

2145K

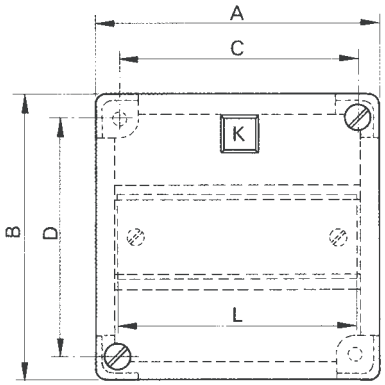


### Article numbers

| Cross-section | 5 x 16 mm² | | 5 x 35 mm² |
|---|---|---|---|
| Ratings | 500V/63A | | 500V/100A |
| with terminals 3P + N + PE | **2125K** | | **2145K** |
| with rail, without terminals | **2081K** | | **2081K** |
| without rail | **2071K** | | **2071K** |

### Technical data

| | | | |
|---|---|---|---|
| A | mm | 160 | 160 |
| B | mm | 160 | 160 |
| Height | mm | 62 | 62 |
| Distance between holes C | mm | 142 | 142 |
| Distance between holes D | mm | 142 | 142 |
| Length of rail L | mm | 144 | 144 |
| Fastening holes ∅ | mm | 5.3 | 5.3 |
| Packing unit | pcs | 5 | 5 |

### Accessories

| | | | |
|---|---|---|---|
| **Replacement cover** | | **31066** | **31066** |
| Packing unit | pcs | 5 | 5 |

# Junction boxes w. base-plate of sheet steel and cover of thermosetting mat., white

## 2.5+6 mm²

- Corrosion-proof base-plate of sheet steel with riveted Woertz rail No. 4050A (see brochure "Screw terminals", page 1.1.134)
- Pre-scored inlets
- Sealable cover nuts
- With two-screw steatite terminals, of the range 4020... with removable sliding cover for through conductors. Metal parts of nickel-plated brass.
- Halogen-free cover

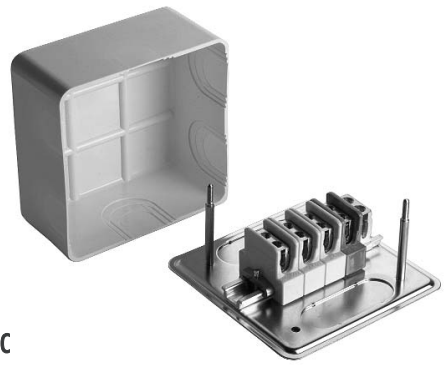

2185C

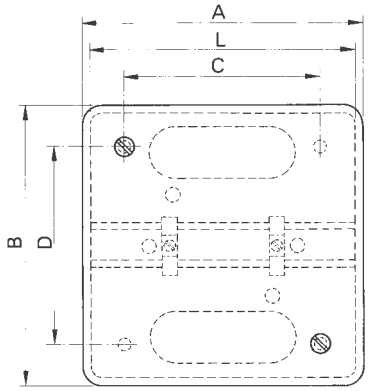


## Article numbers

| Cross-section | 5 x 2.5 mm² | | 5 x 6 mm² | 5 x 6 mm² | |
|---|---|---|---|---|---|
| Ratings | 500V/16A | | 500V/41A | 500V/41A | |
| with terminals 3P + N + PE | **2095C** | | **2185C/95** | **2185C** | |
| with rail, without terminals | **2078C** | | **2078C** | **2080C** | |

## Technical data

| | | | | |
|---|---|---|---|---|
| A | mm | 95 | 95 | 115 |
| B | mm | 95 | 95 | 115 |
| Height | mm | 46 | 46 | 59 |
| Distance between holes C | mm | 77 | 77 | 78 |
| Distance between holes D | mm | 77 | 77 | 78 |
| Length of rail L | mm | 87 | 87 | 106 |
| Fastening hole ∅ | mm | 5 | 5 | 5 |
| Packing unit | pcs | 10 | 10 | 5 |

## Accessories

| | | | | | |
|---|---|---|---|---|---|
| **Replacement cover** | | **31061** | **31061** | **31062** | |
| Packing unit | pcs | 10 | 10 | 5 | |

# Junction boxes w. base-plate of sheet steel and cover of thermosetting mat., white 10-35 mm²

- Corrosion-proof base-plate of sheet steel with riveted Woertz rail No. 4050A (see brochure "Screw terminals" page 1.1.134)
- Pre-scored inlets
- Sealable cover nuts
- With two-screw steatite terminals, of the range 4020S... with removable sliding cover for through conductors. Metal parts of nickel-plated brass.
- Halogen-free cover

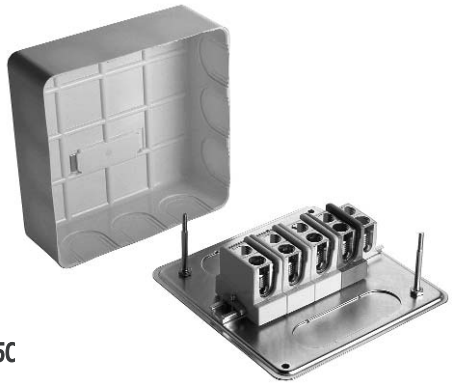

2145C

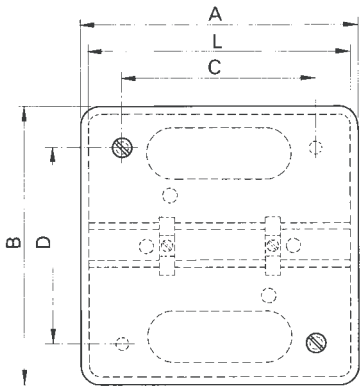


## Article numbers

| Cross-section | 5 x 10 mm² | | 5 x 16 mm² | 5 x 35 mm² | |
|---|---|---|---|---|---|
| Ratings | 500V/57A | | 500V/63A | 500V/100A | |
| with terminals 3P + N + PE | **2115C** | | **2125C*** | **2145C** | |
| with rail, without terminals | **2080C** | | **2081C** | **2081C** | |

## Technical data

| | | | | |
|---|---|---|---|---|
| A | mm | 115 | 160 | 160 |
| B | mm | 115 | 160 | 160 |
| Height | mm | 59 | 60 | 60 |
| Distance between holes C | mm | 78 | 142 | 142 |
| Distance between holes D | mm | 78 | 142 | 142 |
| Length of rail L | mm | 106 | 155 | 155 |
| Fastening hole ∅ | mm | 5 | 5 | 5 |
| Packing unit | pcs | 5 | 5<br>* 2125C: PU=4 pcs | 5 |

## Accessories

| | | | | |
|---|---|---|---|---|
| **Replacement cover** | | **31062** | **31065** | **31065** |
| Packing unit | pcs | 5 | 5 | 5 |



woertz

# Junction boxes with base-plate and cover of sheet steel, grey

## 70+120 mm²

- Corrosion-proof base-plate of sheet steel with riveted Woertz rail No. 4050A or with mounting rail according to EN 60715 TH 35
- Cover of sheet steel with pre-scored inlets
- Sealable cover nuts
- With two-screw steatite terminals of the series 4030S on Woertz rail or polyamide terminals series 3468GR with removable sliding cover for through conductors. Metal parts of nickel-plated brass.

2155

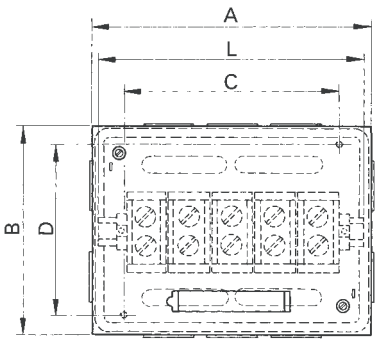


## Article numbers

| Cross-section | 5 x 70 mm² | 5 x 120 mm² |
|---|---|---|
| Ratings | 500V/150A | 500V/250A |
| with steatite terminals 3P +N+PE | **2155** | **2165** |
| with polyamide terminals 3P +N+PE | **2165/3468*** | **2165/3469** |
| with Woertz rail, without terminals | **2082** | **2083** |
| with EN rail 35mm, without terminals | **2082/35** | **2083/35** |

## Technical data

| | | | |
|---|---|---|---|
| A | mm | 200 | 250 |
| B | mm | 150 | 180 |
| Height | mm | 67 | 95 |
| Distance between holes C | mm | 160 | 225 |
| Distance between holes D | mm | 125 | 72 |
| Length of rail L | mm | 193 | 235 |
| Fastening hole ∅ | mm | 5 | 5 |
| Packing unit | pcs | 4 | 1 |

* 2165/3468: PU=1 pcs

## Accessories

| | | | |
|---|---|---|---|
| **Replacement cover** | | **31067** | **31068** |
| Packing unit | pcs | 4 | 1 |

## Note

*2165/3468 should be equipped with a junction box 250 x 180 x 95 mm.

# Junction boxes of thermoplastic

## up to 5 x 2.5 mm²

**IP54 International Protection DIN 40050**
- Hardly combustible
- Impact resistant
- Splash-proof
- With central bolt
- With central screw for fastening cover
- With two fixing straps outside

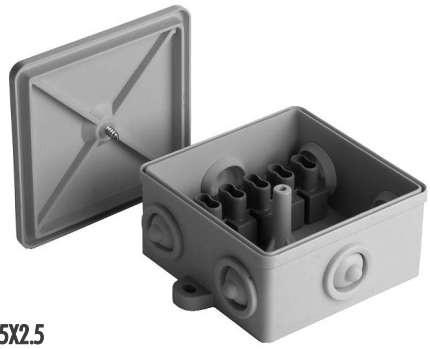

3152/5X2.5

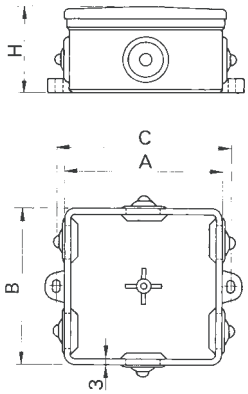


## Article numbers

| Cross-section | with 6 inserted thermoplastic connecting pieces size 1<br>max. feed-through 16mm |
|---|---|
| Ratings | 500V |
| empty, without terminals | **3152** |
| with terminals with blind hole 5x2.5mm² | **3152/5X2.5** |

## Technical data

| | | |
|---|---|---|
| A | mm | 80 |
| B | mm | 80 |
| H | mm | 40 |
| Distance between holes C | mm | 86 |
| Fastening hole ∅ | mm | 4.2 |
| Internal dimensions | mm | 72 x 72 x 34 |
| Packing unit | pcs | 5 |

## Accessories

| | |
|---|---|
| **Thermoplastic connecting piece,** size 1, can be inserted individually into pre-scored inlets ∅ 19mm max. feed-through 16mm | **5900** |
| **Terminals with blind hole** conductors can only be inserted from one side 5 x 2.5 mm² | **5622/5** |
| Burning behaviour according to UL 94 | V2 |
| Toxicity | halogen-free |



woertz

# Boxes of polyester, type Rose

**IP65 International Protection DIN 40050**
- Housing of glass-fibre reinforced polyester
- Grey RAL 7000
- Temperature resistance of seal: - 40° C to + 100° C
- Captive cover screws of stainless steel
- Grooves for fastening screws outside the tight housing (box without external fixing lug)
- Bore scheme according to request
- Other housing dimensions and special sealings available on request

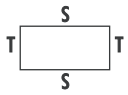


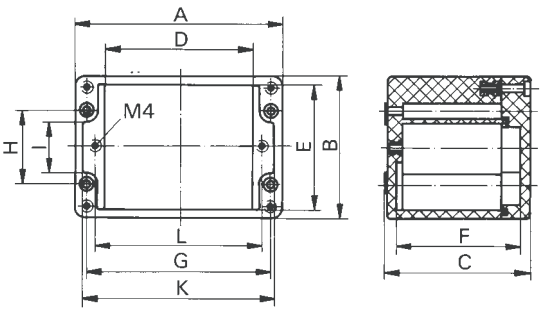


## Article numbers

| | inlet cut into sides of housing<br>housing available with inlets M16, M20, M25, M32 or M40 | | | | |
|---|---|---|---|---|---|
| empty box, without inlet | **49151** | | **49152** | **49153** | |
| box without inlet, with mounting rail according to EN 60715 TH15-5.5 | **49151/15** | | **49152/15** | **49153/15** | |

## Technical data

| | | | | |
|---|---|---|---|---|
| External dimensions A x B x C | mm | 80 x 75 x 56 | 110 x 75 x 56 | 160 x 75 x 76 |
| Internal dimensions D x E x F | mm | 50 x 66 x 47 | 80 x 66 x 47 | 130 x 66 x 66 |
| G | mm | 68 | 98 | 148 |
| H | mm | 45 | 45 | 39 |
| Bores ∅ | mm | 4.3 | 4.5 | 4.5 |
| I | mm | 33 | 33 | 27 |
| K | mm | 71 | 101 | 151 |
| L | mm | 59 | 89 | 139 |
| Metric inlets on each side of casing | | | | |
| S | | max. 1 x M32 | max. 1 x M32 | max. 2 x M40 |
| T | | max. 1 x M25 | max. 1 x M25 | max. 1 x M25 |
| Price class* | | 0 | IA | I |
| Packing unit | pcs | 1 | 1 | 1 |

## Accessories

| | | | |
|---|---|---|---|
| **Terminal sets** complete, for mounting | 8 x 2.5mm² **80451** | 14 x 2.5mm² **80454** | 24 x 2.5mm² **80455** |
| installation height | 31mm | 31mm | 31mm |
| Mounting rail EN 60715 TH 15-5.5 with fastening holes | | | |
| with bare earthing terminal | 1 x 2721 | 1 x 2721 | 1 x 2721 |
| Terminals 2.5mm² | 7 x 2760 | 13 x 2760 | 23 x 2760 |
| End barrier | 1 x 2764 | 1 x 2764 | 1 x 2764 |
| Stopper | 1 x 2754 | 1 x 2754 | 1 x 2754 |
| Burning behaviour according to UL 94 | V0 (self-extinguishing) | V0 (self-extinguishing) | V0 (self-extinguishing) |
| Toxicity | halogen-free | halogen-free | halogen-free |
| Resistance to atmospheric conditions | insensitive to UV | insensitive to UV | insensitive to UV |
| Insulation according to VDE 0100 | completely insulated | completely insulated | completely insulated |
| Impact resistance according to DIN 50014 | >7Nm | >7Nm | >7Nm |
| Water absorption according to ASTMD 570 | max. 0.7% | max. 0.7% | max. 0.7% |

*Price class for metric inlets see price list

# Boxes of polyester, type Rose

**IP65 International Protection DIN 40050**
- Housing of glass-fibre reinforced polyester
- Grey RAL 7000
- Temperature resistance of seal: - 40° C to + 100° C
- Captive cover screws of stainless steel
- Grooves for fastening screws outside the tight housing (box without external fixing lug)
- Bore scheme according to request
- Other housing dimensions and special sealings available on request

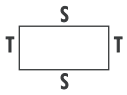

## Article numbers

| | inlets cut into sides of housing<br>casings available with inlets M16, M20, M25, M32 or M40 | |
|---|---|---|
| empty box, without inlet | **49154** | |
| box without inlet, with mounting rail according to EN 60715 TH15-5.5 | **49154/15** | |

## Technical data

| | | |
|---|---|---|
| Metric inlets on each side of casing | | |
| S | | max. 2 x M40 |
| T | | max. 1 x M25 |
| Price class* | | I |
| Packing unit | pcs | 1 |

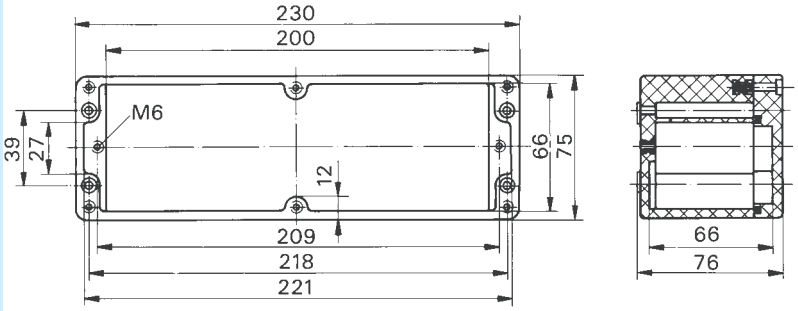


## Accessories

| | |
|---|---|
| **Terminal sets** complete, for mounting | 37 x 2.5mm² **80457** |
| installation height | 31 mm |
| Mounting rail EN 60715 TH 15-5.5 with fastening holes | |
| with bare earthing terminal | 1 x 2721 |
| Terminals 2.5mm² | 36 x 2760 |
| End barrier | 1 x 2764 |
| Stopper | 1 x 2754 |
| Burning behaviour according to UL 94 | V0 (self-extinguishing) |
| Toxicity | halogen-free |
| Resistance to atmospheric conditions | insensitive to UV |
| Insulation according to VDE 0100 | completely insulated |
| Impact resistance according to DIN 50014 | >7Nm |
| Water absorption according to ASTMD 570 | max. 0.7% |

*Price class for metric inlets see price list



woertz

# Boxes of polyester, type Rose

**IP65 International Protection DIN 40050**
- housing of glass-fibre reinforced polyester
- grey RAL 7000
- Temperature resistance of seal: - 40° C to + 100° C
- Captive cover screws of stainless steel
- Grooves for fastening screws outside the tight housing (box without external fixing lug)
- Bore scheme according to request
- Other housing dimensions and special sealings available on request

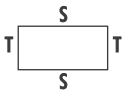


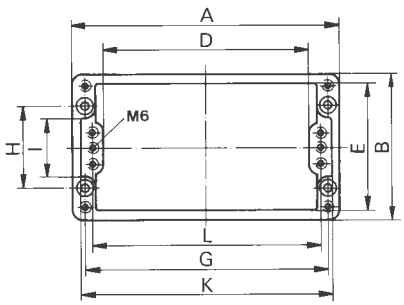


## Article numbers

| | inlets cut into sides of housing<br>housing available with inlets M16, M20, M25, M32 or M40 | | |
|---|---|---|---|
| empty box, without inlet | **49155** | | **49156** |
| box without inlet, with mounting rail according to EN 60715 TH35-7.5 | **49155/35** | | **49156/35** |

## Technical data

| | | | |
|---|---|---|---|
| External dimensions A x B x C | mm | 122 x 120 x 91 | 220 x 120 x 91 |
| Internal dimensions D x E x F | mm | 82 x 111 x 81.5 | 180 x 111 x 81.5 |
| G | mm | 106 | 204 |
| H | mm | 82 | 82 |
| Bores ∅ | mm | 4.3 | 6.5 |
| I | mm | 66 | 66 |
| K | mm | 113 | 211 |
| L | mm | 95 | 193 |
| Metric inlets on each side of casing | | | |
| S | | max. 1 x M40 | max. 3 x M40 |
| T | | max. 1 x M40 | max. 1 x M40 |
| Price class* | | I | II |
| Packing unit | pcs | 1 | 1 |

## Accessories

| | | |
|---|---|---|
| Burning behaviour according to UL 94 | V0 (self-extinguishing) | V0 (self-extinguishing) |
| Toxicity | halogen-free | halogen-free |
| Resistance to atmospheric conditions | insensitive to UV | insensitive to UV |
| Insulation according to VDE 0100 | completely insulated | completely insulated |
| Impact resistance according to DIN 50014 | >7Nm | >7Nm |
| Water absorption according to ASTMD 570 | max. 0.7% | max. 0.7% |

*Price class for metric inlets see price list

# Boxes of polyester, type Rose

**IP65 International Protection DIN 40050**
- Housing of glass-fibre reinforced polyester
- Grey RAL 7000
- Temperature resistance of seal: - 40° C to + 100° C
- Captive cover screws of stainless steel
- Grooves for fastening screws outside the tight housing (box without external fixing lug)
- Bore scheme according to request
- Other housing dimensions and special sealings available on request

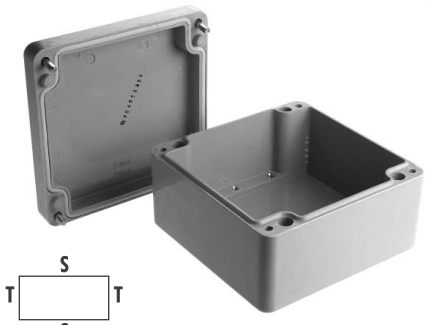

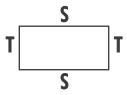


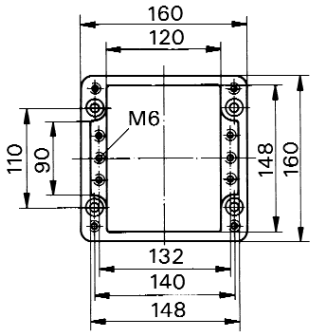


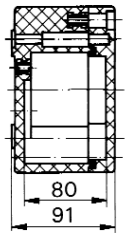


## Article numbers

| | inlets cut into sides of housing<br>housing available with inlets M16, M20, M25, M32 or M40 | |
|---|---|---|
| empty box, without inlet | **49157** | |
| box without inlet, with mounting rail according to EN 60715 TH35-7.5 | **49157/35** | |

## Technical data

| | | |
|---|---|---|
| Metric inlets on each side of casing | | |
| S | | max. 2 x M40 |
| T | | max. 1 x M40 |
| Price class* | | III |
| Packing unit | pcs | 1 |

## Accessories

| | |
|---|---|
| Burning behaviour according to UL 94 | V0 (self-extinguishing) |
| Toxicity | halogen-free |
| Resistance to atmospheric conditions | insensitive to UV |
| Insulation according to VDE 0100 | completely insulated |
| Impact resistance according to DIN 50014 | >7Nm |
| Water absorption according to ASTMD 570 | max. 0.7% |

*Price class for metric inlets see price list



woertz

# Junction boxes of thermosetting material, grey, 90x90x54mm

## up to 7 x 2.5 mm², for screwed cable glands or cable entries

**IP54 International Protection DIN 40050**
- With two slewable fixing lugs
- For connection rings of steatite, of the range 2505..., with one-screw terminals with clamping ring, of nickel-plated brass
- Earthing terminal protected against working loose

3150

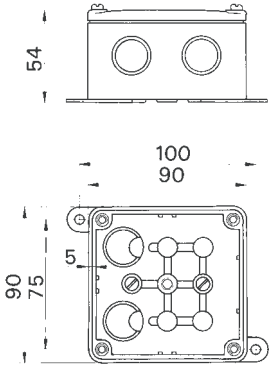


## Article numbers

| | With 7 pre-scored inlets, ∅ 23 mm | |
|---|---|---|
| Ratings | 500V | |
| empty, without connection ring | **3150** | |
| with connection ring 7x2.5 mm² 16A, 6 P+PE | **3150/7X2.5** | |

## Technical data

| | | |
|---|---|---|
| External dimensions | mm | 90 x 90 x 54 |
| Internal dimensions | mm | 80 x 80 x 40 |
| Fastening hole ∅ | mm | 6 |
| Packing unit | | |
| 3150 | pcs | 10 |
| 3150/7X2.5 | pcs | 5 |

## Accessories

| | | |
|---|---|---|
| for inserting into inlet 23mm ∅ | | |
| **Screwed cable gland** of plastic, light grey for cables of 8.5-14.0 mm outside ∅ with quadratic press-in nut, nickel-plated brass | **49870** | |
| **Cable entry of thermoplastic**, grey, ∅ 5-18 mm | **3069** | |

| | |
|---|---|
| Burning behaviour according to UL 94 | V0 (self-extinguishing) |
| Toxicity | free of halogen and heavy metal |
| Impact-resistance according to DIN 53453 | 7-9 kJ/m² |
| Water absorption according to DIN 53495, process 3 | < 0.4% |
| Heat resistance according to ISO 75 | 160-180°C |

# Junction boxes of thermosetting material, grey, 120x120x68mm

## up to 5 x 10 mm², for screwed cable glands or cable entries

**IP54 International Protection DIN 40050**
- With two slewable fixing lugs
- For two-screw branching terminals series 30840..., 5x10 mm²

3190

## Article numbers

| Ratings | With 6 pre-scored inlets ∅ 29 mm and 4 pre-scored inlets ∅ 23 mm 500V | |
|---|---|---|
| empty, without rail, without terminals | **3190** | |
| empty, with mounting rail according to EN 60715 TH 35 without terminals | **3190/35** | |
| with terminals 5x6mm², 41A 3P+N+PE Art.No. 30841 | **3190/5X6** | |
| with terminals 5x10mm², 57A 3P+N+PE Art.No. 30842 | **3190/5X10** | |

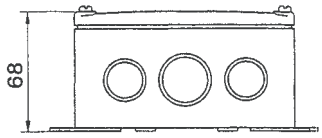


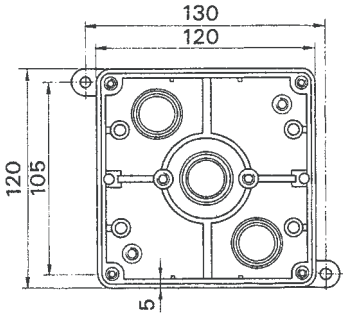


## Technical data

| | | |
|---|---|---|
| External dimensions | mm | 120 x 120 x 68 |
| Internal dimensions | mm | 110 x 110 x 50 |
| Fastening hole ∅ | mm | 6 |
| Length of rail L | mm | 90 |
| Distance between holes Ld | mm | 46 |
| Packing unit | pcs | 6 |

## Accessories

| | | |
|---|---|---|
| for inserting into inlet 29mm ∅ | | |
| **Screwed cable gland** of plastic, light grey, for cables of 11.0-18.0 mm outside ∅, with hexagonal press-in nut, nickel-plated brass | **49871** | |
| **Cable entry of thermoplastic**, light grey, ∅ 9-24 mm | **3078** | |
| for inserting into inlet 23mm ∅ | | |
| **Screwed cable gland** of plastic, light grey, for cables of 8.5-14.0 mm outside ∅, with quadratic press-in nut, nickel-plated brass | **49870** | |
| **Cable entry of thermoplastic**, light grey, ∅ 5-18 mm | **3069** | |

| | |
|---|---|
| Burning behaviour according to UL 94 | V0 (self-extinguishing) |
| Toxicity | free of halogen and heavy metal |
| Impact resistance according to DIN 53453 | 7-9 kJ/m² |
| Water absorption according to DIN 53495, process 3 | < 0.4% |
| Heat resistance according to ISO 75 | 160-180°C |



woertz

# Junction boxes of thermosetting material, grey, 180x130x80mm

## up to 5 x 35 mm$^2$ , for screwed cable glands or cable entries

**IP54 International Protection DIN 40050**
- With two slewable fixing lugs
- For two-screw branching terminals series 30840..., 5x35 mm$^2$

3195

## Article numbers

| Ratings | With 4 pre-scored inlets ∅ 38 mm and 6 pre-scored inlets ∅ 29 mm 500V | |
|---|---|---|
| empty, without rail, without terminals | 3195 | |
| empty, with mounting rail according to EN 60715 TH 35, without terminals | 3195/35 | |
| with terminals 5x16mm$^2$, 63A 3P+N+PE Art.No. 30843 | 3195/5X16 | |
| with terminals 5x35mm$^2$, 100A 3P+N+PE Art.No. 30844 | 3195/5X35 | |

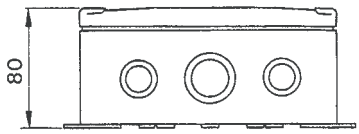


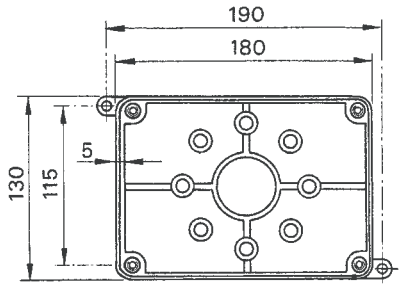


## Technical data

| | | |
|---|---|---|
| External dimensions | mm | 180 x 130 x 80 |
| Internal dimensions | mm | 170 x 120 x 58 |
| Fastening holes ∅ | mm | 6 |
| Length of rail L | mm | 115 |
| Distance between holes Ld | mm | 100 |
| Packing unit | pcs | 4 |

## Accessories

| | | |
|---|---|---|
| for inserting into inlet 38mm ∅ | | |
| **Screwed cable gland** of plastic, light grey, for cables of 17.0-25.0 mm outside ∅, with hexagonal press-in nut, nickel-plated brass | 49872 | |
| **Cable entry of thermoplastic**, light grey, ∅ 9-32 mm | 3079 | |
| for inserting into inlet 29mm ∅ | | |
| **Screwed cable gland** of plastic, light grey, for cables of 11.0-18.0 mm outside ∅, with hexagonal press-in nut, nickel-plated brass | 49871 | |
| **Cable entry of thermoplastic**, light grey, ∅ 9-24 mm | 3078 | |

| | |
|---|---|
| Burning behaviour according to UL 94 | V0 (self-extinguishing) |
| Toxicity | free of halogen and heavy metal |
| Impact resistance according to DIN 53453 | 7-9 kJ/m$^2$ |
| Water absorption according to DIN 53495, process 3 | < 0.4% |
| Heat resistance according to ISO 75 | 160-180°C |

# Notes

06.2004 / 2'000 E